10C18 AIRMIX® PUMP

SPARE PARTS BREAKDOWN

sames kremlin

AIR MOTOR

Model 340-2 P/N 144-855-600

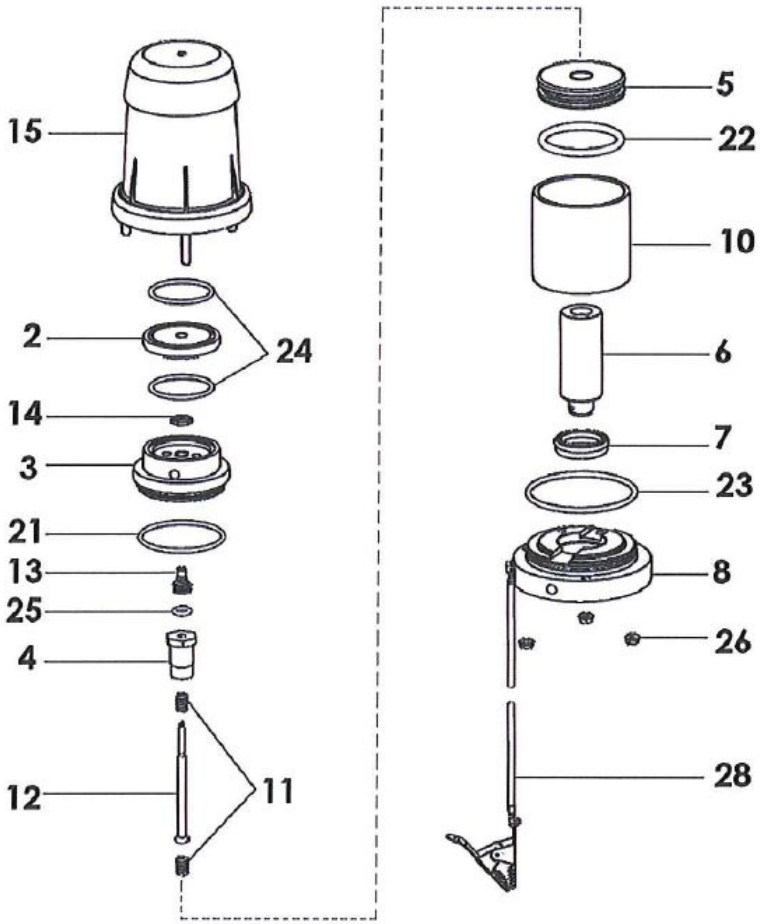

Comply with the maximum screwing torque of 4 mN / 2.95 ft/lbs on the nuts (26)

REF.	PART NUMBER	DESCRIPTION	QTY
2	044-850-108	Cover, reversing body	1
3	044-850-107	Reversing body	1
4	044-550-006	Screw, air piston	1
5	044-850-105	Upper air piston	1
6	044-850-102	Lower air piston	1
7	109-210-401	U-Seal (pack of 10)	1
8	044-850-101	Lower support	1
10	044-850-106	Air cylinder	1
*11	144-855-698	Spring (pack of 2)	1
12	044-850-103	Control rod assembly	1
13	044-940-051	Seal holder	1
14	044-550-013	Valve	1
15	144-855-605	Cover	1
21	909-420-259	O-Ring	1
22	909-130-438	Ring, R36	1
23	909-420-108	O-Ring	1
24	909-420-220	O-Ring	1
25	109-130-311	Ring, R9 (pack of 10)	2
26	906-011-501	Nut, M6	3
28	901-180-024	Cable, ground (Length: 5m / 16.4 ft)	1
REF.	**PART NUMBER**	**KIT DESCRIPTION**	**QTY**
*	144-850-150	Servicing kit (Ref. 7, 11, 14, 21, 22, 23, 24, 25)	1
*	144-855-696	Screw, air piston + control rod kit (Ref. 4, 12)	1
*	144-855-697	Reversing kit (Ref. 13, 14, 25)	1

* - Denotes a Suggested Spare Part
NS - Denotes part Not Serviceable

10C18 AIRMIX® PUMP

SPARE PARTS BREAKDOWN

sames kremlin

FLUID SECTION

Material Inlet (F 1/2) PN - 144-855-750

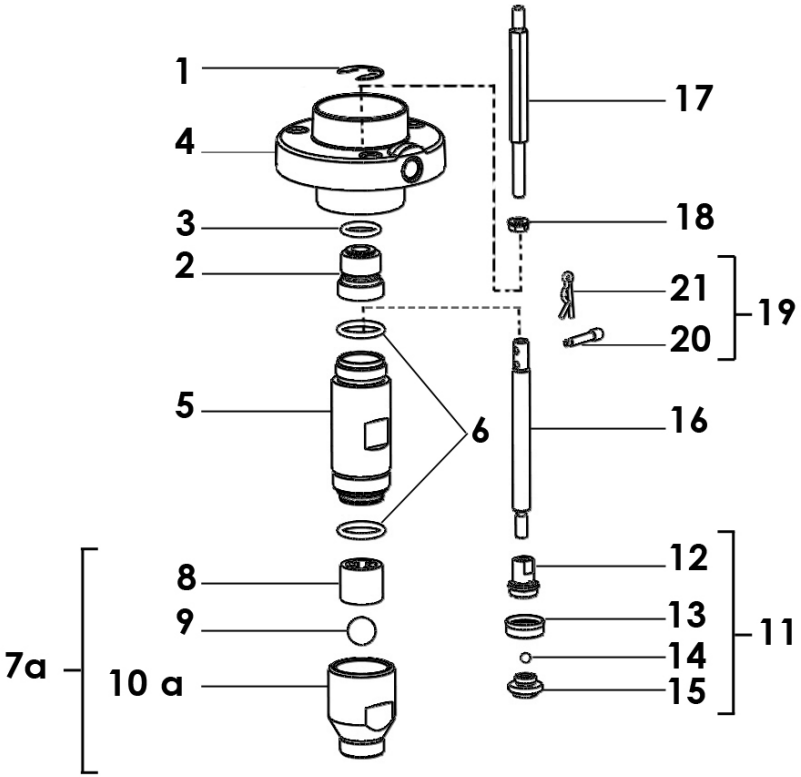

REF.	PART NUMBER	DESCRIPTION	QTY
1	902-201-116	Retaining ring	1
2	144-030-157	Cartridge with GT seal (stainless steel)	1
3	144-589-500	Seal (pack of 10)	1
4	044-855-701	Outlet flange	1
*5	144-855-702	Cylinder (stainless) + seal (Ref. 6)	1
6	144-585-354	Seal (x 10)	2
REF.	**PART NUMBER**	**MATERIAL INLET - F 1/2**	**QTY**
7a	144-855-710	Suction valve assembly F 1/2	1
8	044-931-003	Ball cage	1
9	907-414-242	Ball Ø 16 (stainless steel)	1
10a	NS	Pump foot F 1/2	1
*11	144-850-151	Exhaust valve assembly	1
12	044-805-401	Valve holder	1
13	044-765-503	Valve seal, PFA	1
14	907-414-108	Ball Ø 5 (stainless steel)	1
15	044-805-402	Seat	1
16	044-580-002	Fluid piston rod	1
REF.	PART NUMBER	KIT DESCRIPTION	QTY
*	144-855-799	Servicing kit (Ref. 6, 9, 13, 14)	1

* - Denotes a Suggested Spare Part
NS - Denotes part Not Serviceable

OPTIONAL

REF.	PART NUMBER	DESCRIPTION	QTY
13	144-850-157	Valve seal, polyacetal	1
17	144-855-551	Tie rod (pack of 3)	1
18	906-011-501	Nut	3
19	144-855-501	Axis with pin	1
20	NS	Axis	1
21	NS	Pin	1

Sames
North America Headquarters
45001 5 Mile Road | Plymouth, Michigan 48170
Toll: (800)573-5554 | Tel: (734)979-0100 | Fax: (734)927-0064
Canada Branch
931 Progress Avenue, Unit 7 | Scarborough, Ontario M1G 3V5
Toll: (800)450-0655 | Tel: (416)431-5017 | Fax: (416)431-9171

LT 999-600-234 ©2023 **Sames** reserves the right to change without notice characteristics and services offered as well as equipment and attachments of these.