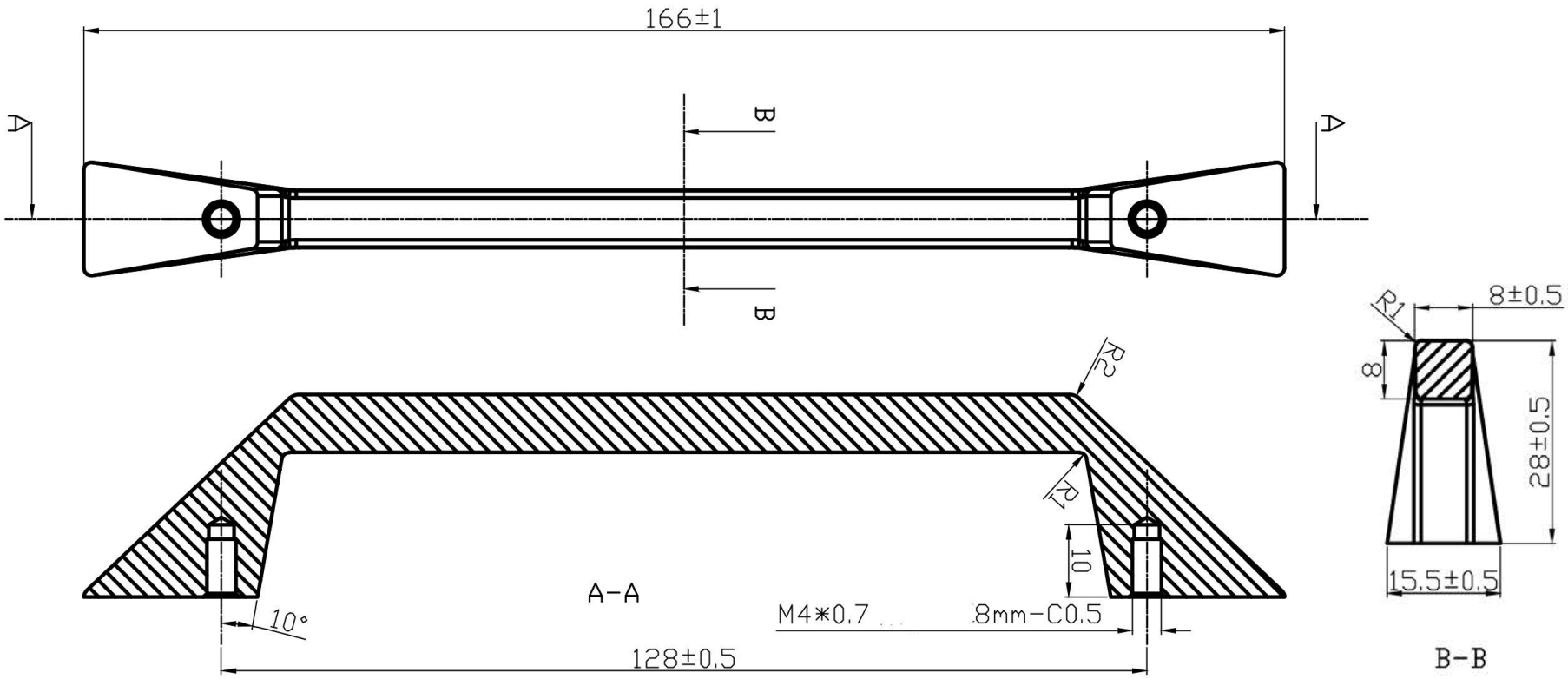

PART NO.	MATERIAL	DATE
6072-1048-C	**ZINC**	**6-2021**
COLLECTION **RIGHT**	DESCRIPTION **RIGHT 320MM WHITE PULL**	PROPRIETARY AND CONFIDENTIAL **THE INFORMATION CONTAINED IN THIS DRAWING IS THE SOLE PROPERTY OF BERENSON CORP. ANY REPRODUCTION IN PART OR AS A WHOLE WITHOUT THE WRITTEN PERMISSION OF BERENSON CORP IS PROHIBITED.**
UNIT OF MEASURE **MILLIMETERS**		

R. Christensen
by Berenson

2495 Main Street, Suite 111 | Buffalo, NY
Phone: 800.333.0578 | Fax: 716.833.2402
Email: Info@BerensonHardware.com