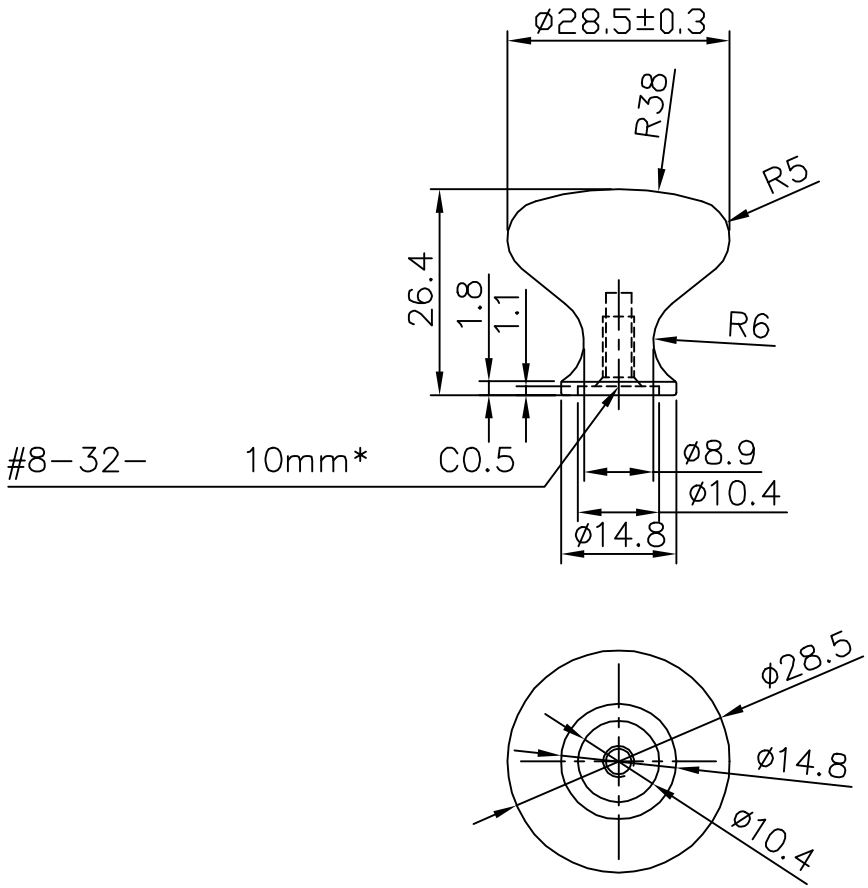

PART NO.	MATERIAL	DATE	
9352-10WN-P	**ZINC**	**07-18-2018**	Advantage +Plus by Berenson
COLLECTION **ADVANTAGE PLUS TWO**	DESCRIPTION **ADVANTAGE PLUS TWO WEATHERED NICKEL ROUND KNOB**	PROPRIETARY AND CONFIDENTIAL **THE INFORMATION CONTAINED IN THIS DRAWING IS THE SOLE PROPERTY OF BERENSON CORP. ANY REPRODUCTION IN PART OR AS A WHOLE WITHOUT THE WRITTEN PERMISSION OF BERENSON CORP IS PROHIBITED.**	2495 Main Street, Suite 111 | Buffalo, NY Phone: 800.333.0578 | Fax: 716.833.2402 Email: Info@BerensonHardware.com
UNIT OF MEASURE **MILLIMETERS**			